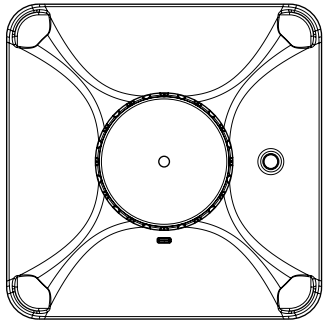

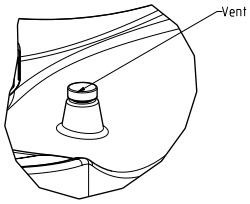


DETAIL B
SCALE 1:5

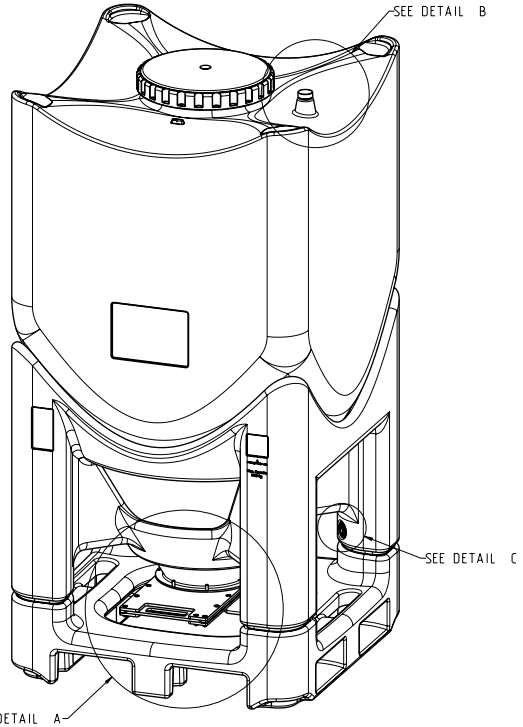


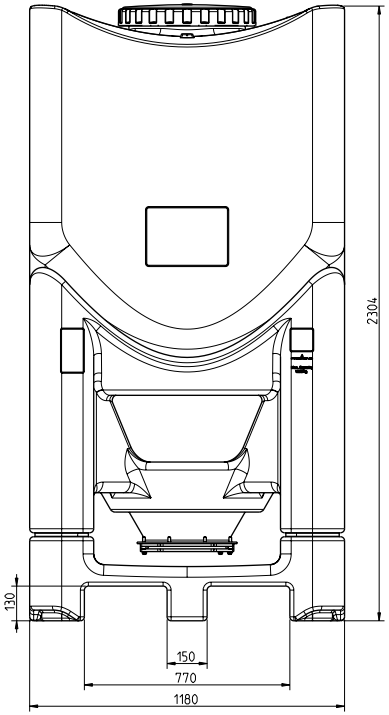


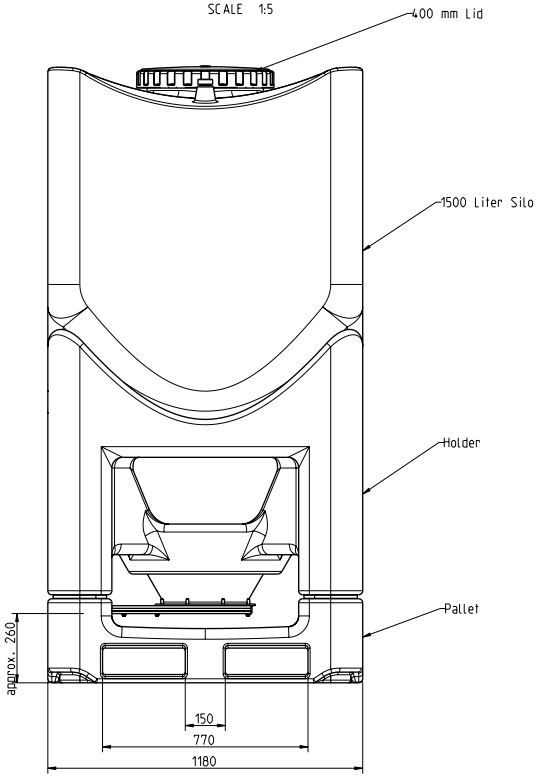


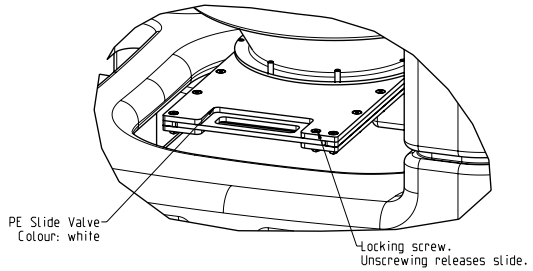


DETAIL A
SCALE 1:5

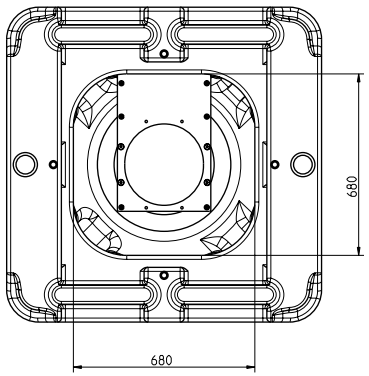


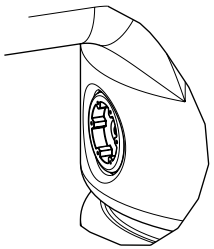

DETAIL C
SCALE 1:2

| | | | |
|---|---|---|---|
| TOLERANCES FOR ROTO-MOULDED PARTS ACCORDING DIN 16 901 - 96A | | | |
| TOLERANCES FOR WALLTHICKNESS | 0 - 5 | ± 1 | All wall-thicknesses shown or stated on this drawing are |
| | > 5 | ± 20% | nominal and therefore for illustration purposes only. |
| TOLERANCES FOR OTHER THAN ROTO-MOULDED PARTS ±0.3 | | | |

Plotdate: 04/01/2008 16:12