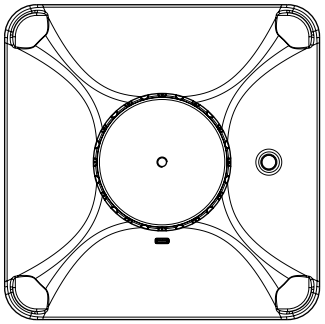

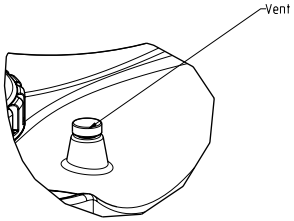

DETAIL A
SCALE 1:5

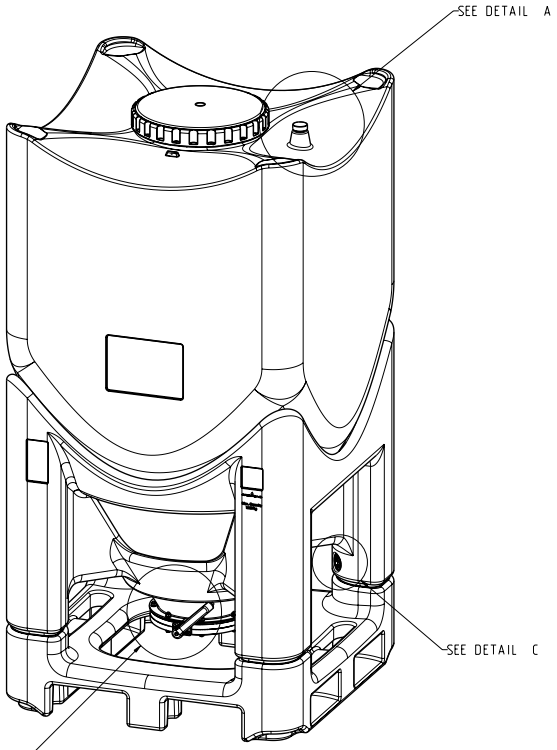

SCALE 1:10

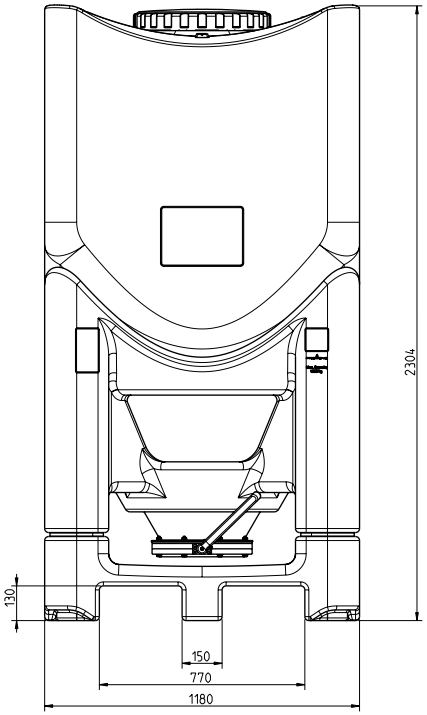

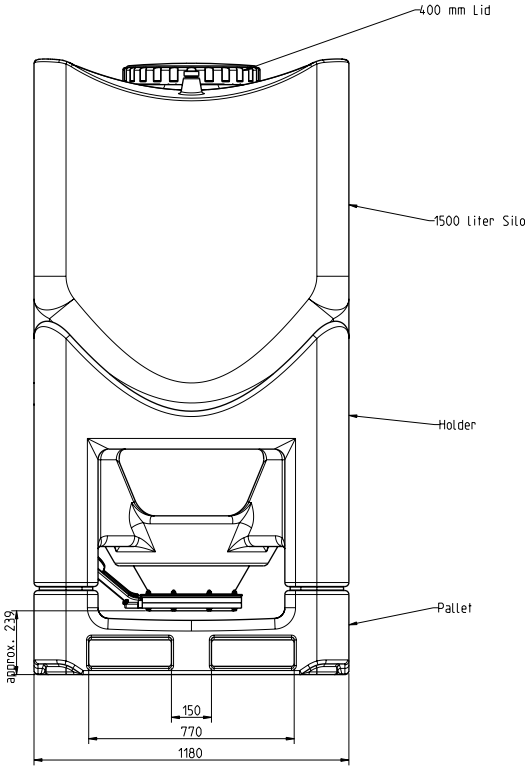

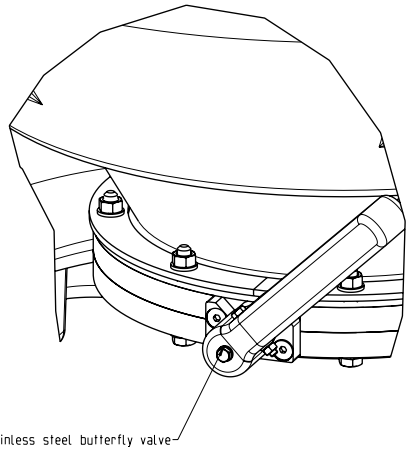

DETAIL B
SCALE 1:2

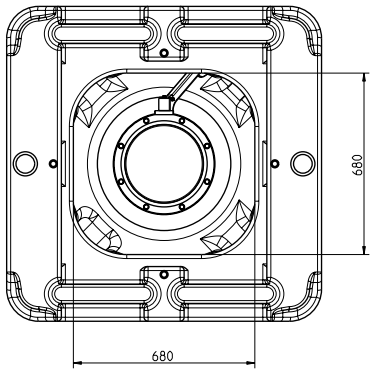

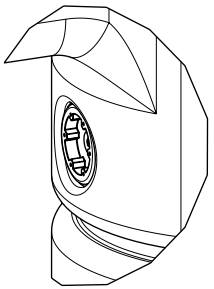

DETAIL C
SCALE 1:2

TOLERANCES FOR ROTO-MOULDED PARTS ACCORDING DIN 16 901 - 90A			
TOLERANCES FOR WALLTHICKNESS	0 - 5	± 1	All wall-thicknesses shown or stated on this drawing are
	> 5	± 20%	nominal and therefore for illustration purposes only.
TOLERANCES FOR OTHER THAN ROTO-MOULDED PARTS ±0.3			

Plotdate: 04/01/2008 16:06